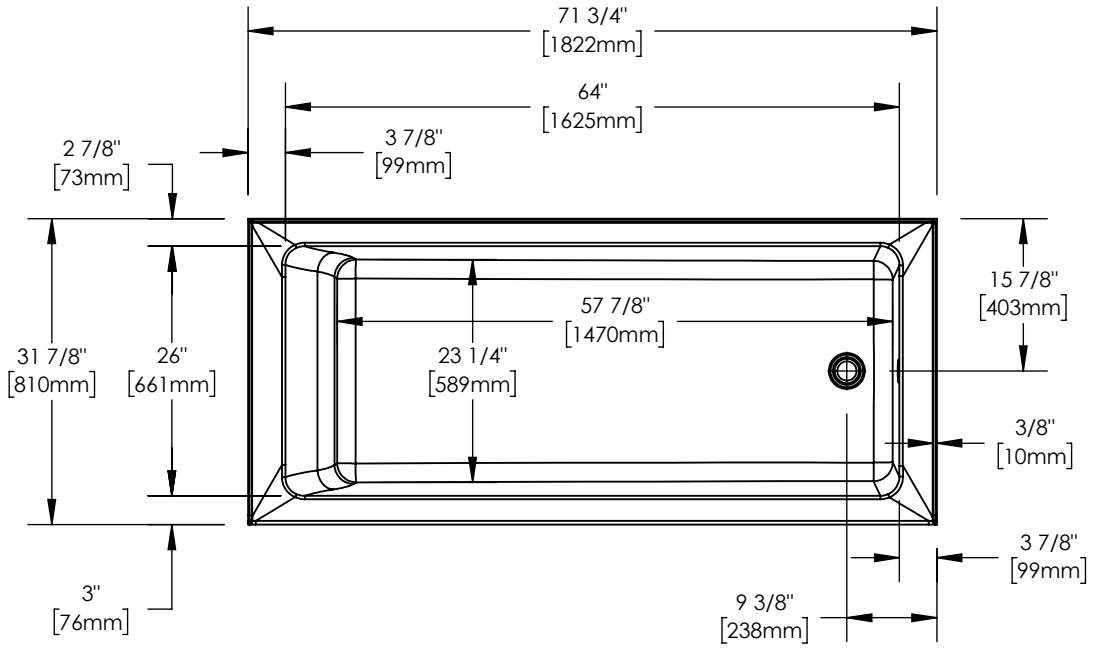


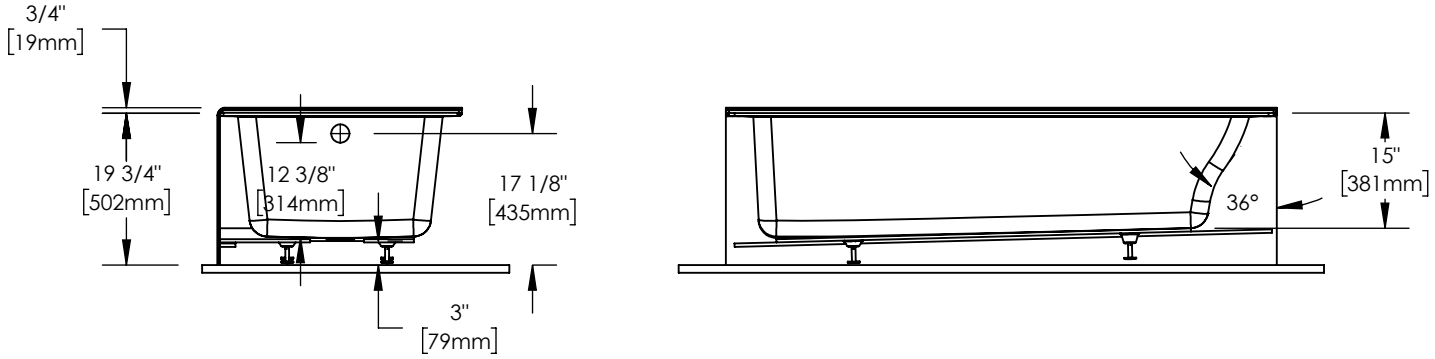


**Wood support design may vary.**
**All dimensions are approximate.**
**Structure measurements must be verified against the unit to ensure proper fit.**