PFISTER

# Arkitek™

## *8"-15" Widespread Lavatory Faucet*

LG49-LPMC Finish*(C)* ❑
LG49-LPMK Finish*(K)* ❑

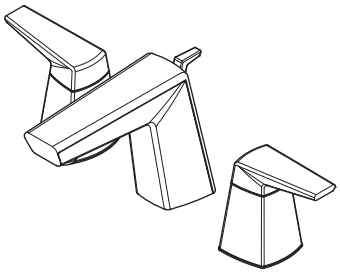

## Specifications

### *Features*

- 1.2 GPM Flow Rate
- All Metal Pop-Up Drain
- Mounting Hardware Included
- PVD Finish (K Finish Only)
- Pforever Seal™ Ceramic Disc Valves
- Limited Lifetime Warranty

### *Code Compliance*

Pfister products are designed and manufactured in compliance with the following standards and codes:

- IAPMO Certified to ASME A112.18.1/CSA B125.1
- EPA WaterSense Certified
- NSF/ANSI/CAN61:Q≤1
- CEC Certified/CALGreen compliant
- ADA Compliant – ANSI A117.1 (Lever Handles Only)

## Dimensions

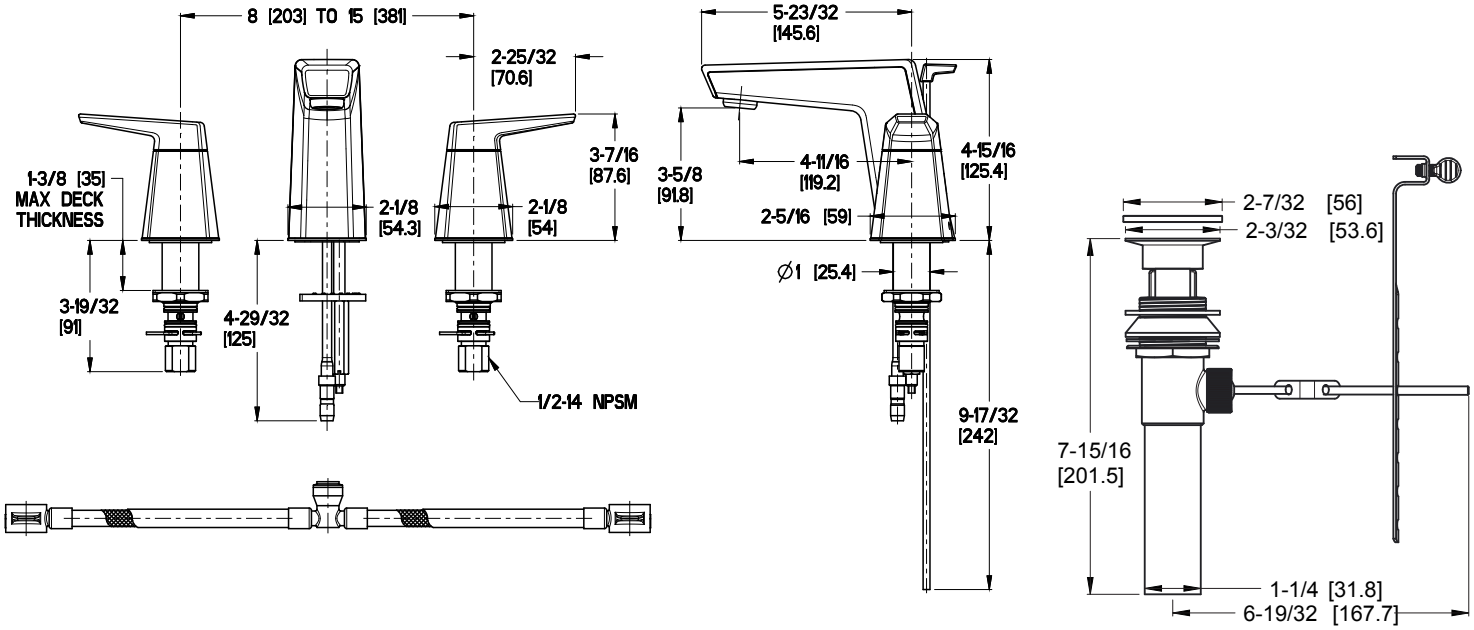


Metal Pop-Up

Ø1-1/4 Min to Ø1-1/2 Max. Deck Hole Openings




Copyright © 2022, Pfister Inc.