Persuade® Curv

Two-piece elongated toilet with skirted trapway, dual-flush

K-75790

Features

- Two-piece design
- Elongated bowl offers added room and comfort
- Comfort Height® feature offers chair-height seating that makes sitting down and standing up easier for most adults
- Includes left-hand Polished Chrome dual-flush trip lever
- Skirted trapway simplifies cleaning
- Dual-flush technology allows you to choose between a full or partial flush
- 1.6 gpf (6.0 lpf) full flush and 0.8 gpf (3.0 lpf) partial flush
- Standard 12" (305 mm) rough-in only. Cannot be combined with K-5383, or K-5381 for use in 10" or 14" installations
- Patented ReadyLock® installation system, a simple solution for skirted toilets, saves time, hassle, and eliminates the need to drill into the floor for standard 12" (305 mm) rough-in
- Eligible for consumer rebates in some municipalities
- This product can help a building earn Water Efficiency points in LEED® Green Building Rating System

Installation

- Standard 12" (305 mm) rough-in
- Seat sold separately
- Requires mounting plate for heated seat installation (sold separately)

Recommended Products/Accessories

K-5588 Purefresh® Deodorizing elongated toilet seat
K-9237 Dual-flush Trip Lever
1265114 Connector Hose
K-23726 Drain treatment
1362736 Mounting Plate Kit Exposed Wire
K-26801 Impro® ReadyLatch® Quiet-Close™ elongated toilet seat

Included Components

K-4326 Elongated toilet bowl with skirted trapway
K-19042 Toilet tank, dual-flush

ADA | **CSA B651** | **OBC**

Codes/Standards

ASME A112.19.14
ASME A112.19.2/CSA B45.1
DOE - Energy Policy Act 1992
EPA WaterSense®
California Energy Commission (CEC)
ADA
ICC/ANSI A117.1
CSA B651
OBC
IAPMO Certification

KOHLER® Toilets and Seats Limited Warranty

See website for detailed warranty information.

Available Colors/Finishes

Color tiles intended for reference only.

Color	Code	Description
	0	White
	96	Biscuit
	NY	Dune
	95	Ice™ Grey
	7	Black Black™

Persuade® Curv

Two-piece elongated toilet with skirted trapway, dual-flush

K-75790

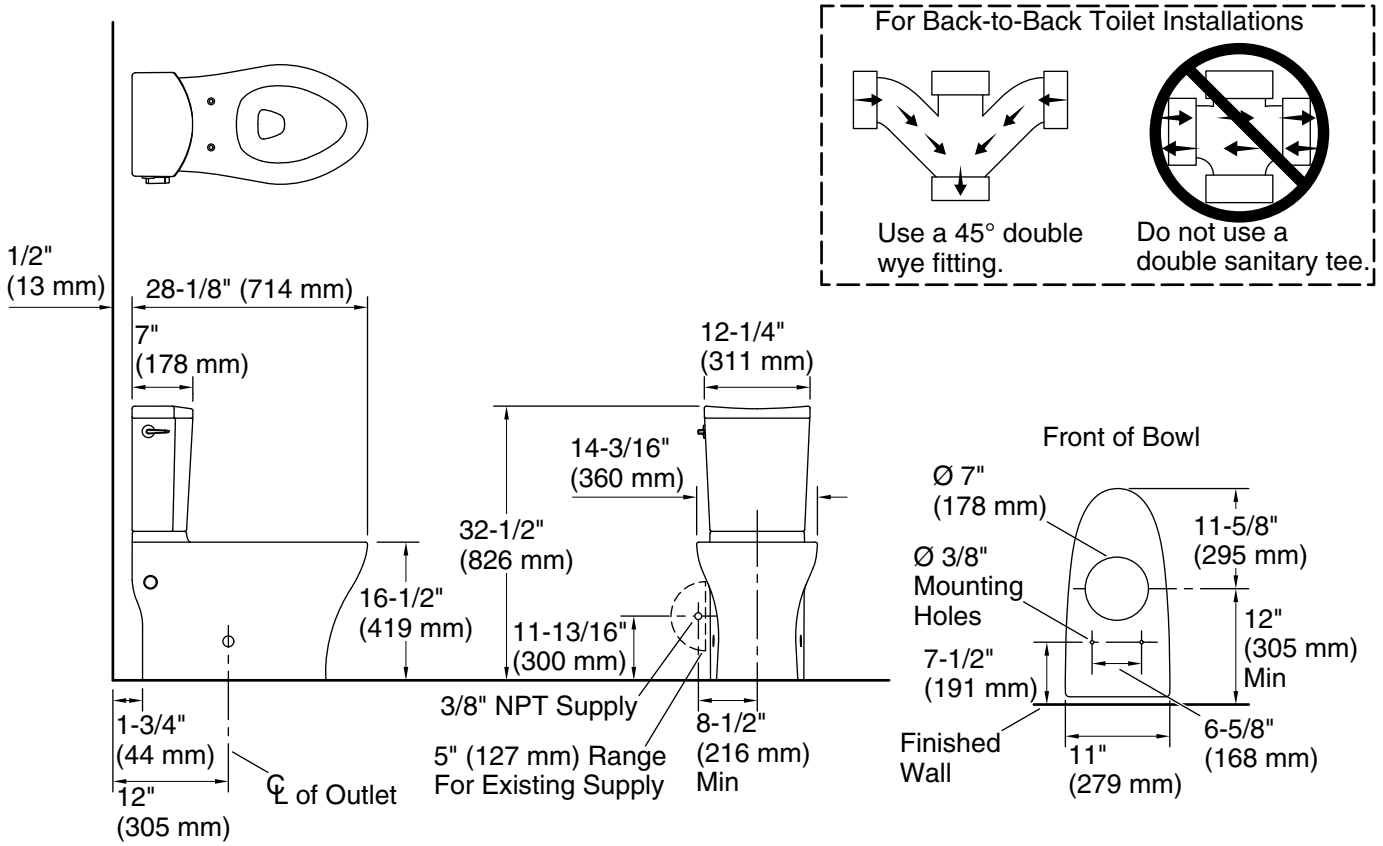

Technical Information

All product dimensions are nominal.

Toilet type:	Floor-mount
Waste Outlet:	Floor
Bowl shape:	Elongated
Flush type:	Class Five
Trap passageway:	2-5/16" (58 mm)
Water surface size:	4-1/2" x 5-3/4" (114 mm x 146 mm)
Rim to water surface:	8-1/2" (216 mm)
Rough-in:	12" (305 mm)
Seat-mounting holes:	5-1/2" (140 mm)

Notes

Install this product according to the installation instructions.

IMPORTANT! The rough-in must be 12" (305 mm) or more from the base of the wall or baseboard. Install or relocate the supply and outlet as necessary to conform to rough-in dimensions.

If this toilet is installed in new construction, install a new supply stop following the dimensions in the diagram.

In installations with the supply stop installed, the existing supply stop may need to be relocated if it is less than 8-1/2" (216 mm) from the centerline of the toilet. Dry fit the toilet to confirm if the supply stop needs to be relocated.

The supplied hose will extend roughly 6" (152 mm) from the toilet. If the supplied hose does not reach the supply stop, a longer supply hose may be used.