American Standard
Style That Works Better

CADET® PRO™ ELONGATED TOILET
VITREOUS CHINA

CADET® PRO™ ELONGATED TOILET

❑ **215CA 004**
- Features the **Cadet® Flushing System**
- Vitreous china
- Low consumption (6.0 Lpf/1.3 gpf)
- Trade exclusive tank
- PowerWash® rim scrubs bowl with each flush
- Robust metal trip lever & metal shank fill valve
- Includes EZ-Install Tools w/colour match bowl caps
- EverClean® surface included
- Oversized 3" flush valve
- Fully-glazed 2-1/8" trapway
- 12" (305mm) rough-in
- Generous 9" x 8" (229 x 203mm) water surface area
- Chrome finish trip lever is supplied
- 1,000g MaP Score** at 6.0 Lpf/1.3 gpf
- 5 year warranty

❑ **215CA 054** Same as above except with lined tank

Separate Component Parts:
❑ **3517C 101** Elongated Bowl
❑ **4188A 004** Tank
❑ **4188A 054** Lined Tank

Nominal Dimensions:
767 x 441 x 733mm (30-1/8" x 17-3/8" x 28-7/8")

Fixture only, seat and supply sold separately

Compliance Certifications -
Meets or Exceeds the Following Specifications:
- ASME A112.19.2-2008/CSA B45.1-08 for Vitreous China Fixtures

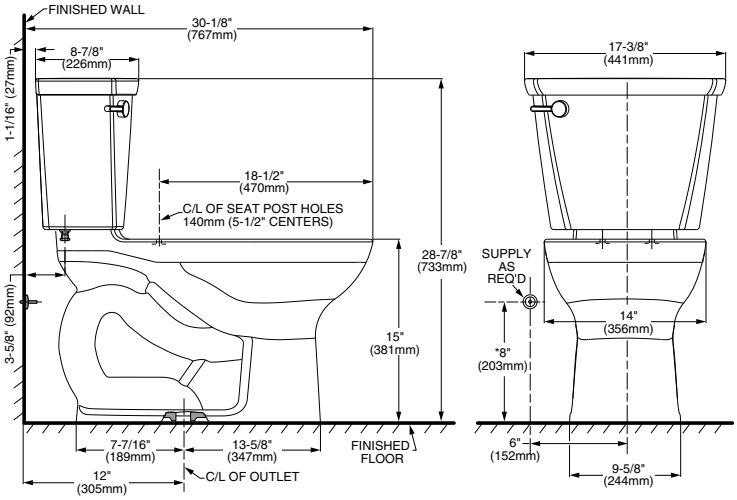

NOTES:
THIS TOILET IS DESIGNED TO ROUGH-IN AT A MINIMUM DIMENSION OF 305MM (12") FROM FINISHED WALL TO C/L OF OUTLET.
SUPPLY NOT INCLUDED WITH FIXTURE AND MUST BE ORDERED SEPARATELY.
* DIMENSION SHOWN FOR LOCATION OF SUPPLY IS SUGGESTED.

IMPORTANT: Dimensions of fixtures are nominal and may vary within the range of tolerances established by ANSI Standard A112.19.2.
These measurements are subject to change or cancellation. No responsibility is assumed for use of superseded or voided pages.

** Maximum Performance (MaP) testing performed by IAPMO R&T Lab. MaP Report conducted by Veritec Consulting, Inc. and Koeller and Company.

To Be Specified:
❑ Colour: ❑ White ❑ Bone ❑ Linen
❑ Seat: #5321 110 EverClean® Elongated Seat with Slow Close Snap-Off Hinges
❑ Supply with stop:

Cadet® PRO™

© 2012 AS Canada ULC